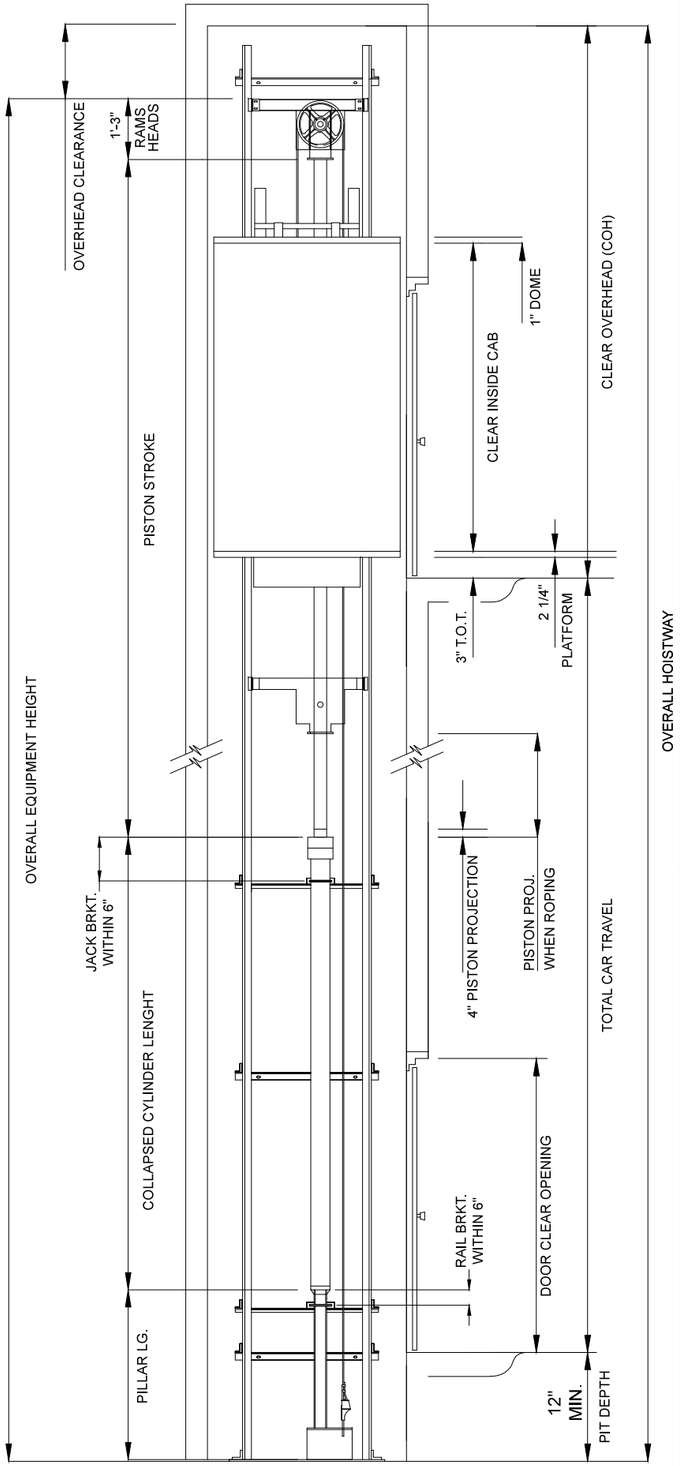

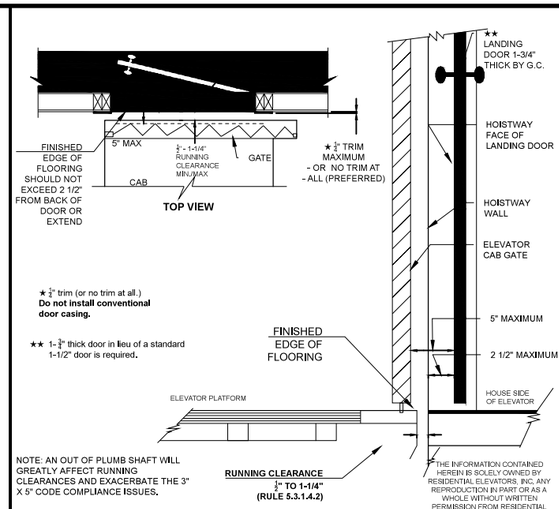

SIDE VIEW

THE INFORMATION CONTAINED HEREIN IS SOLELY OWNED BY RESIDENTIAL ELEVATORS, INC. ANY REPRODUCTION IN PART OR AS A WHOLE WITHOUT WRITTEN PERMISSION FROM RESIDENTIAL ELEVATORS, INC. IS STRICTLY PROHIBITED.

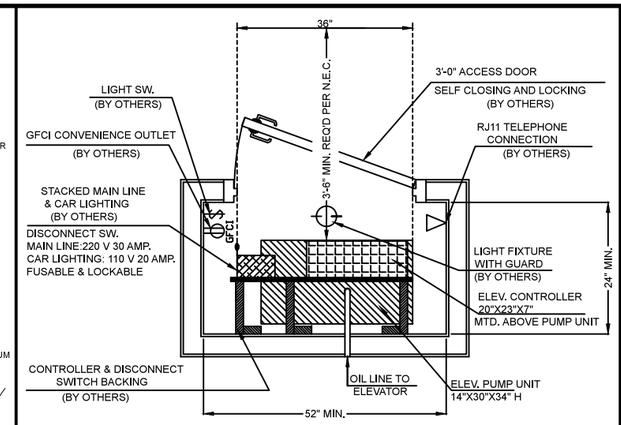

MACHINE ROOM PLAN
NTS

* MACHINE ROOM TO BE MIN. 7'-0" CLEAR INSIDE CEILING
* 6'-8" DOOR HEIGHT MIN
* NO VENTING REQUIRED

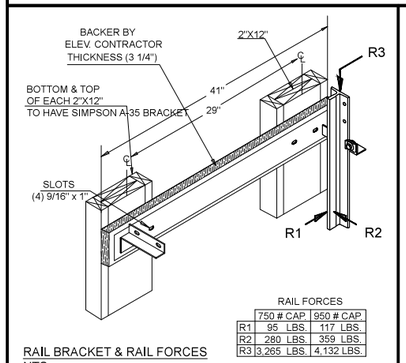

RAIL FORCES

	750 # CAP.	950 # CAP.
R1	95 LBS.	117 LBS.
R2	280 LBS.	359 LBS.
R3	3,265 LBS.	4,132 LBS.

RAIL BRACKET & RAIL FORCES
NTS

PIT REACTIONS

LOAD ON JACK	750 LBS	3815 LBS
LOAD ON JACK	950 LBS	4216 LBS

FRONT	REAR	SIDE	FLOOR LABLES	FLOOR TO FLOOR HEIGHTS
			6	
			5	
			4	
			3	
			2	
			1	

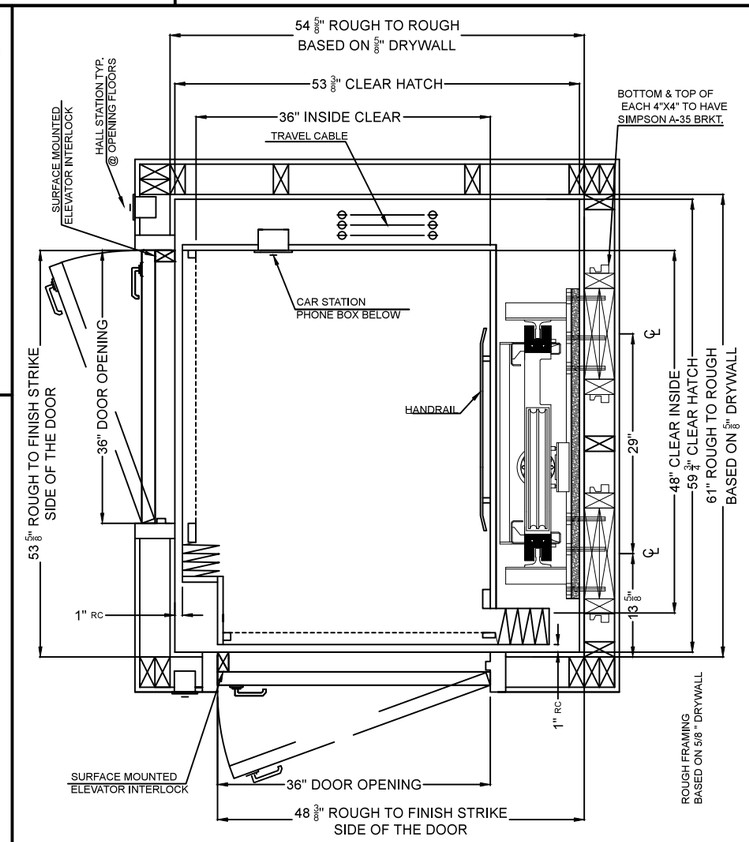

PLAN VIEW
NTS

* DOOR CAN NOT EXCEED 36", ALL SIZED DOORS MUST STRIKE SAME LOCATION & SAME SIDE

* ALL INCIDENTAL PATCHING BY OTHERS

WORK DONE BY OTHERS

1. A FUSED DISCONNECT SWITCH FOR EACH ELEVATOR. PER NATIONAL ELECTRIC CODE, WIRE TO SUIT A 220 VOLTS 30 AMPS. SERVICE, FUSED FOR 20 AMP. DUAL ELEMENT (TIME DELAY FUSE) WITH NEUTRAL. THE FUSED DISCONNECTSWITCH IS TO BE FURNISHED WITH NORMALLY OPEN ELECTRICAL INTERLOCK CONTACTS. THE ELEVATOR CONTRACTOR WILL CONNECT THESE INERLOCK COINTACTS TO THE ELEVATOR CONTROLLER. THESE CONTACTS ARE REQUIRED SO THAT THE BATTERY OPERATED DESCENT UNIT CAN DEFERENTIATE BETWEEN AN ACTUAL POWER FAILURE AND MANUAL USE OF THE DISCONNECT SWITCH. SUGGESTED SOURCE FOR SINGLE PHASE HEAVY DUTY SAFETY SWITCHES OR EQUAL: SQUARE "D" - CAT.#H-221 – ELEC. INTERLOCK #EK 300-2; I.T.E. - CAT.# SN-321 – ELEC. INTERLOCK #SC-3; -WESTINGHOUSE CAT.# HFN-221 – ELEC. INTERLOCK #RK-1.

2. A 120 VAC 20 AMP SINGLE PHASE POWER SUPPLY WITH FUSED S.P.S.T. DISCONNECT SWITCH OR CIRCUIT BREAKER WITH FEEDER WIRING TO CONTROLLER FOR PER N.E.C.

3. TEMPERATURE IN THE MACHINE ROOM TO BE MAINTAINED BETWEEN 60° AND 100° FAHRENHEIT. RELATIVE HUMIDITY NOT TO EXCEED 95% (SEE RECOMMEND MACHINE ROOM PLAN).

4. TELEPHONE CONNECTION IN MACHINE ROOM.

5. THE ELEVATOR HOISTWAY SHOULD BE CONSTRUCTED IN ACCORDANCE WITH ALL LOCAL CODES.

6. HOISTWAY FRAMEWORK MUST BE PLUMB AND SQUARE WITHIN ½" DOORS AND FRAMES TO BE INSTALLED PLUMB ONE ABOVE THE OTHER. ALL WALLS AND SIDE MEMBERS MUST EXTEND FROM SILL TO BEAM.

7. ADEQUATE RAIL BRACKET SUPPORT MUST BE PROVIDED AS INDICATED ON SHOP DRAWINGS FASTENINGS NOT TO EXCEED VERTICAL INTERVALS SHOWN.

8. BARRICADES OUTSIDE OF ELEVATOR HOISTWAY AS REQUIRED FOR PROTECTION OF WORKMEN, OTHER CONTRACTORS OR OCCUPANTS.

9. ALL WALL PATCHING, PAINTING AND GROUTING BY GENERAL CONTRACTORS.

10. KILN DRIED SOLID CORE WOOD OR STEEL HOISTWAY DOORS, ENTRANCES, SILLS, AND ASSOCIATED FRAMING TO BE PROVIDED AND INSTALLED BY THE PURCHASER AFTER THE ELEVATOR IS SET IN PLACE. METAL SILL AT EACH LANDING.

11. FOR RESIDENTIAL APPLICATIONS CLEARANCE BETWEEN HOISTWAY DOOR AND SILL MUST NOT EXCEED 1 1/2".

12. FINISH FLOORING IN ELEVATOR CAB.

POLICY STATEMENT

Regarding

Unfinished Natural Hardwood Elevator Cabs and Car Doors

Stellar-Vator's Natural Hardwood Cabs and Car Doors are made from select genuine solid hardwoods and unfinished veneers. Factory recommends immediate finishing to minimizes moisture penetration providing increased stability thus reducing the chances of panel warping or separation.

In addition, characteristic differences in color and gain are produced by nature in every tree.These variations create the beauty and interest found in fine woods.

Stellar-Vator will furnish unfinished Hardwood Cabs and Car Doors at the request of our customer. Since Stellar-Vator has no control over these products after shipment, Stellar-Vator will not guarantee or warranty these materials.

It is recommended that these be stored by others in a controlled environment, subject to little humidity changes, and the finishes as soon as possible. With regard to car doors, mask the vinyl connectors and metal hinges prior to application of finish to prevent penetration of finish into the glue lines.

LOW OVERHEAD STATEMENT

Please note that clearance above the elevator equipment when it is fully extended MAY NOT comply with ASME A17.1 Part V rule 500.3 depending on the inspector's interpretation of the rule.

CAB HEIGHT	MIN. COH	CLR
6'-8"	8'-0"	1'-0"
7'-4"	8'-8"	1'-0"
8'-0"	9'-4"	1'-0"

STELLAR-VATOR®

STELLAR-VATOR
P.O. BOX 6845
THOUSAND OAKS, CA. 91359
818-509-8228
WWW.STELLAR-VATOR.com

NO	DATE	REVISION
1		
2		
3		

PRELIMINARY DRAWING

NOT FOR CONSTRUCTION

Approval of Stellar-Vator shop drawing is for manufacturing verification of floor to floor travel, equipment room orientation (if provided), door positions, and motor voltage, but Not limited there to.

COMPLIANCE'S

THIS EQUIPMENT IS DESIGNED ACCORDING TO THE REQUIREMENTS OF ANSI A 17.1 SAFETY CODE FOR ELEVATORS, AND ALL LOCAL AND STATE CODES. THE FEATURES FOR THE BENEFIT OF THE HANDICAPPED ARE PROVIDED AS REQUIRED BY THE "AMERICANS WITH DISABILITIES ACT".

THIS INFORMATION IS CONFIDENTIAL AND REMAINS THE PROPERTY OF STELLAR-VATOR. ITS USE REPRODUCTION OR DISSEMINATION WITHOUT THE EXPRESS PERMISSION OF STELLAR-VATOR IS STRICTLY PROHIBITED.

PROJECT NUMBER:

PROJECT NAME:
Name
Full Address of Job Site

DATE CREATED
MARCH 28, 2016

DRAWN BY:
D.G

HOISTWAY PLAN
(A-750RLL)

SHEET NAME:
RESIDENTIAL ELEVATOR LAYOUT

SHEET NO:
PD-1